Concrete Maturity Meter

P-08 TUE-03

Team Concrete Birthday

Khyati Singh
23B1220

S.Monica
23B1243

Khushi Chandak
23B3920

Rahul Kumar
23B1212

Arnav Ramteke
23B1281

GUIDE: Prof. Siddharth Tallur

EE344: EDL

Problem Statement

Concrete strength development depends strongly on time and curing temperature, but existing monitoring methods are slow and inefficient.

Traditional cylinder testing is destructive and delayed, while manual temperature logging is labor-intensive and error-prone.

Modern construction sites need a real-time, non-destructive, in-situ solution to track concrete curing and strength development.

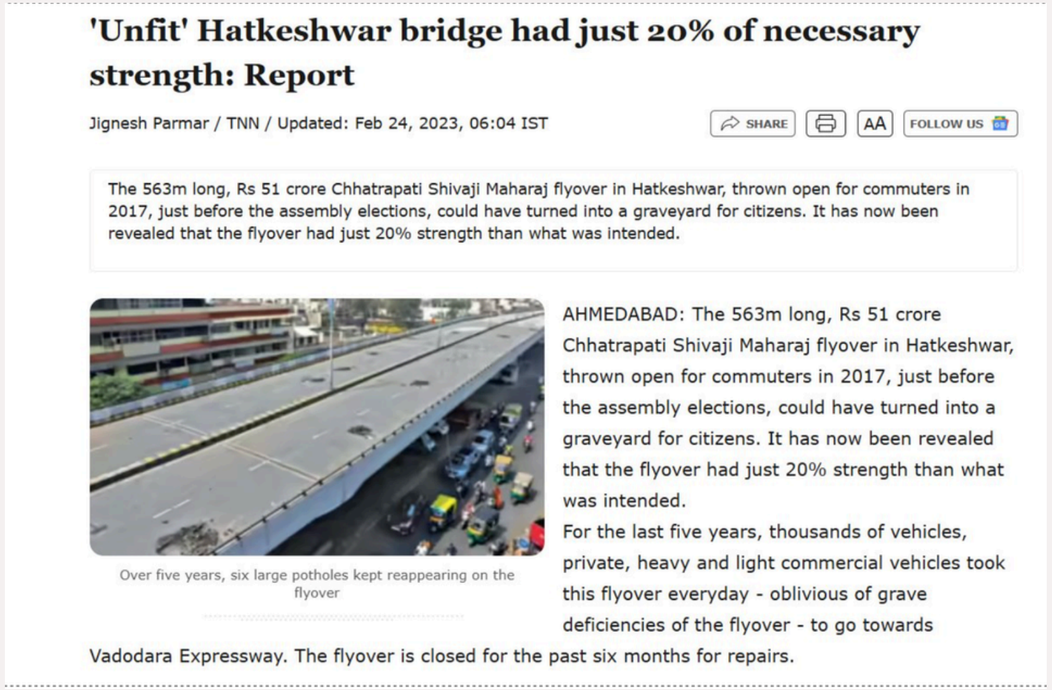

'Unfit' Hatkeshwar bridge had just 20% of necessary strength: Report

Jignesh Parmar / TNN / Updated: Feb 24, 2023, 06:04 IST

SHARE AA FOLLOW US

The 563m long, Rs 51 crore Chhatrapati Shivaji Maharaj flyover in Hatkeshwar, thrown open for commuters in 2017, just before the assembly elections, could have turned into a graveyard for citizens. It has now been revealed that the flyover had just 20% strength than what was intended.

Over five years, six large potholes kept reappearing on the flyover

AHMEDABAD: The 563m long, Rs 51 crore Chhatrapati Shivaji Maharaj flyover in Hatkeshwar, thrown open for commuters in 2017, just before the assembly elections, could have turned into a graveyard for citizens. It has now been revealed that the flyover had just 20% strength than what was intended.

For the last five years, thousands of vehicles, private, heavy and light commercial vehicles took this flyover everyday - oblivious of grave deficiencies of the flyover - to go towards Vadodara Expressway. The flyover is closed for the past six months for repairs.

Such a system must operate reliably inside concrete, support long battery life, provide robust wireless access, and accurately estimate strength using temperature-based maturity models.

Proposed Solution

A compact, embedded, battery-powered concrete monitoring node that:

- **Periodically** measures internal **concrete temperature**
- Computes concrete maturity and **strength status** directly on the MCU
- Stores temperature data locally in non-volatile memory
- Uses **BLE** (CC2650 BoostXL) to transmit a simple strength-status signal (Percentage of maturity) to a nearby device

Value Proposition

- Non-destructive, **in-situ** strength assessment
- Eliminates delays and errors from manual testing
- Ultra-low power operation suitable for long-term embedding
- No external data analysis required — decision-ready output
- Smartphone or laptop-based access via BLE

Achieving the Specifications

- Defined a low-power workflow: temperature sensing → on-MCU maturity computation → local storage → minimal BLE transmission.
- Selected **STM32F103 MCU** after comparing with Raspberry Pi due to low power consumption and industrial reliability.
- Chose **BLE (CC2650 BoostXL)** over Wi-Fi and BLE Beacons to meet ultra-low power wireless requirements.
- Used digital temperature sensor **(TMP1075)** for high accuracy, low noise, and minimal external circuitry.
- Implemented SPI flash memory for reliable long-term temperature data logging.
- Selected a **3.7 V Li-Po battery** for high energy density and compact size.
- Optimized power consumption using sleep modes and event-based BLE transmission to extend battery life.

Principle of Operation

The Concrete Maturity Meter operates as an embedded, low-power sensing node that monitors internal concrete temperature and evaluates strength development in real time.

Operating Cycle (Every 15 Minutes)

- The system wakes up from low-power sleep mode.
- The TMP1075 digital temperature sensor measures the internal concrete temperature.
- The measured temperature is stored as raw data in SPI flash memory for logging and traceability.
- The STM32 microcontroller computes the concrete maturity index using a temperature-time based maturity model.
- Based on the computed maturity, the MCU determines the concrete strength percentage.
- The BLE advertising payload is updated with the current strength status.
- The MCU then returns to deep sleep to minimize power consumption.

Wireless Operation

- The BLE module (CC2650 BoostXL) continuously advertises at a low duty cycle, independent of the MCU sleep state
- A nearby mobile device or PC can receive the broadcasted strength status without initiating a connection

Target Specifications

Temperature Accuracy:
±0.1 to ±0.5 °C

Wireless Range: ≥ 3 meters

Sampling Interval:
Every 15 minutes

Supply Voltage: 3.3 V

Operating Time: ≥ 2 months

Operating Environment:
Embedded inside concrete

Block Diagram Explanation

Sensor Block

Measures internal concrete temperature accurately during curing

MCU Block (STM32)

Controls system operation, processes temperature data, and computes concrete maturity

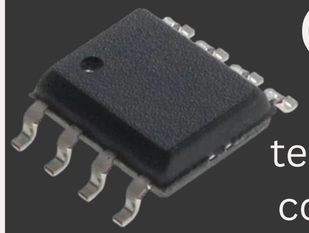

Memory Block (SPI NOR Flash)

Stores raw temperature data and computed results for long-term reference

BLE Block CC2650 BoostXL

Wirelessly broadcasts concrete strength status to a nearby device

Power Block

Battery-powered system with voltage regulation for low-power operation

Casing/Hardware Design

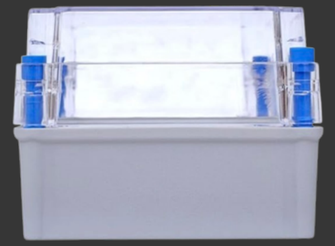

Plastic (Polycarbonate) IP67 box .

High-Level Architecture

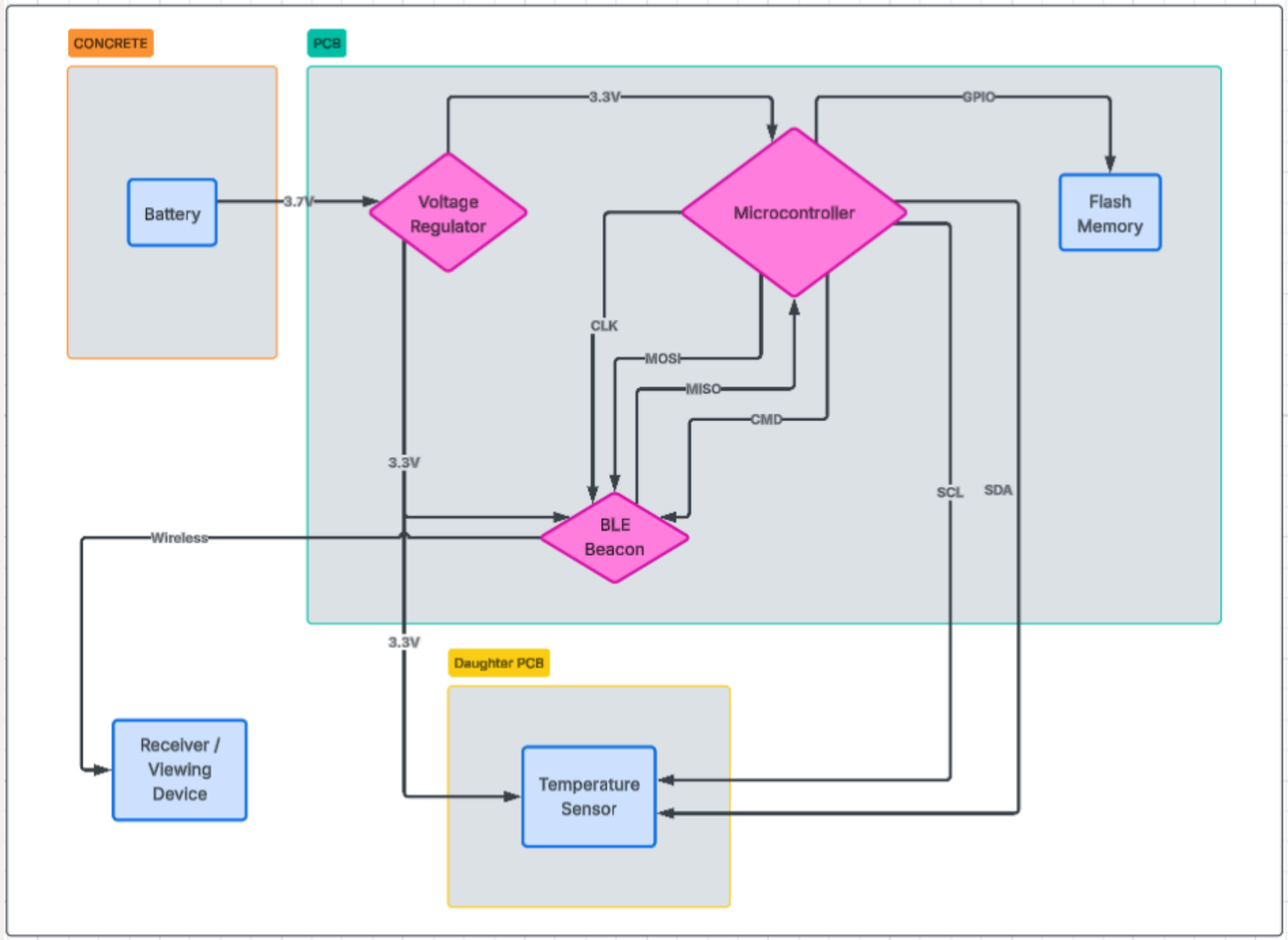

Original block diagram

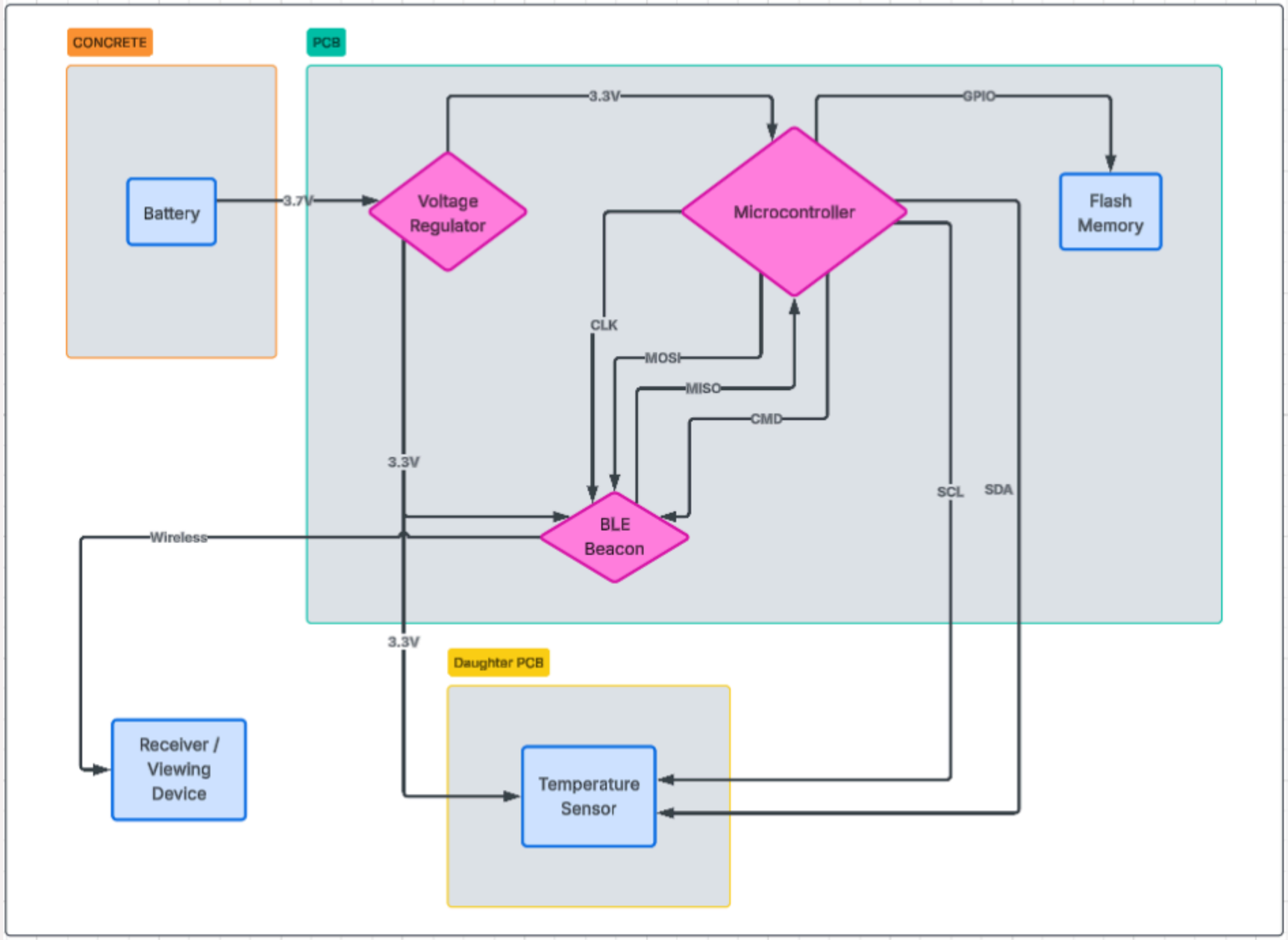

Refined Block Diagram

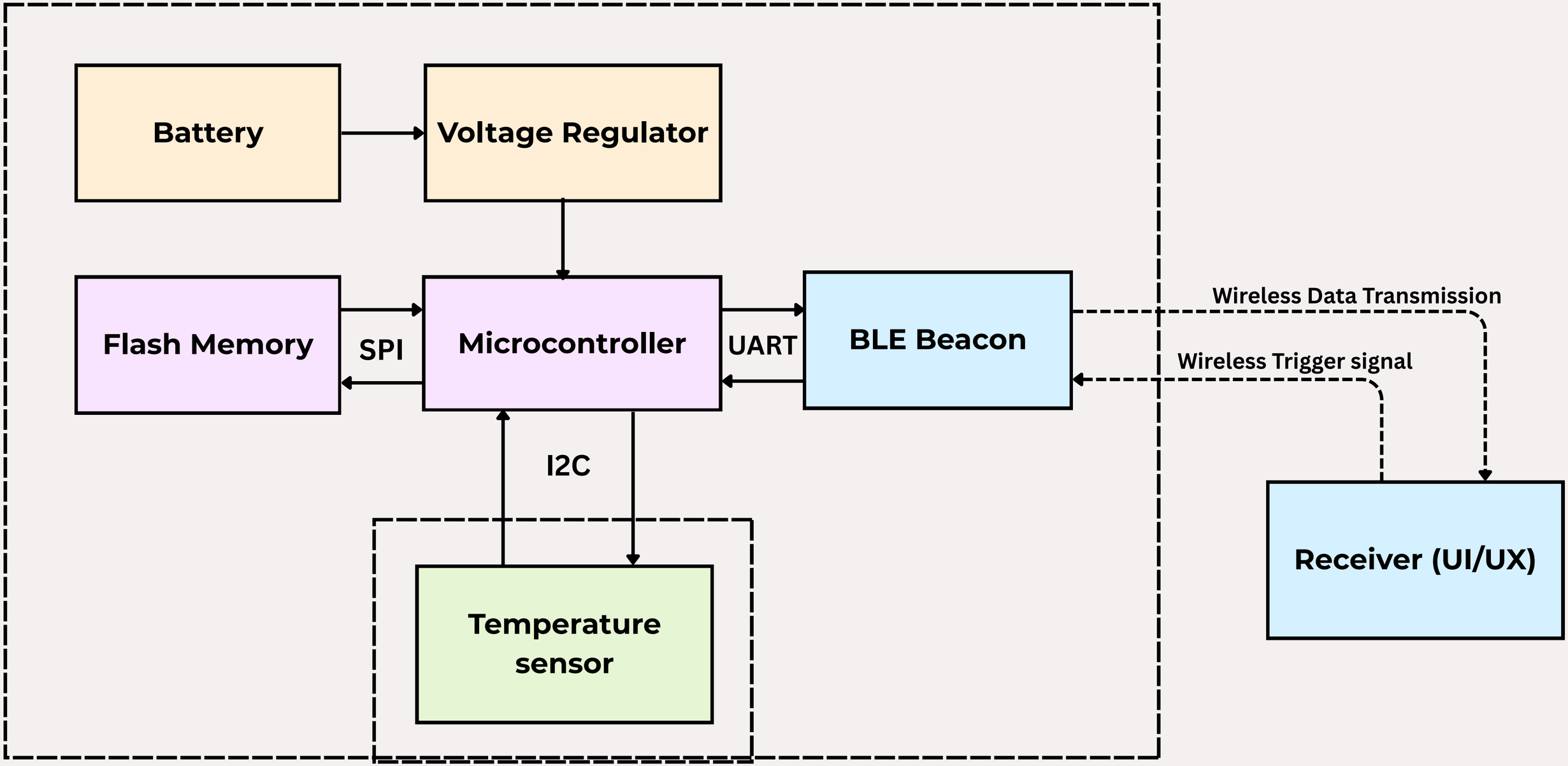

Component Selection, Justification & BOM

Component Name	Quantity	Justification
MCU STM32F103RBT6	1	32-bit ARM Cortex-M3 MCU with low-power modes and multiple interfaces (I^2C, SPI, UART), suitable for on-device maturity computation and system control.
BLE BOOSTXL CC2650	1	BLE 4.2-compliant wireless module optimized for beacon operation with ultra-low power consumption, ideal for embedded and battery-powered applications.
Flash W25Q32JVSSIQ	1	32-Mbit non-volatile memory for reliable long-term storage of temperature data and computed results.
Temperature Sensor TMP1075DR	1	High-accuracy(±0.1–0.5 °C), low-power digital temperature sensor with I^2C interface, well-suited for precise concrete temperature monitoring.
LDO ADP122AUJZ-3.3-R7	1	Low-dropout voltage regulator providing stable 3.3 V supply with low quiescent current, improving power efficiency.
Battery KP Original 103450 3.3V 1800 mAh LiPo	1	Rechargeable lithium-polymer battery offering high energy density and compact size, enabling long-term embedded operation with stable 3.3 V output and 300 mA current capability.

Power Budget Summary

Component Name	Component Energy (Wh)
STM32	2.2
BLE	0.105
Temperature Sensor	0.211
Flash Memory	0.002
LDO	0.262
Total	2.78

Battery Capacity = 5.84 Wh → Large safety margin

Circuit Diagram

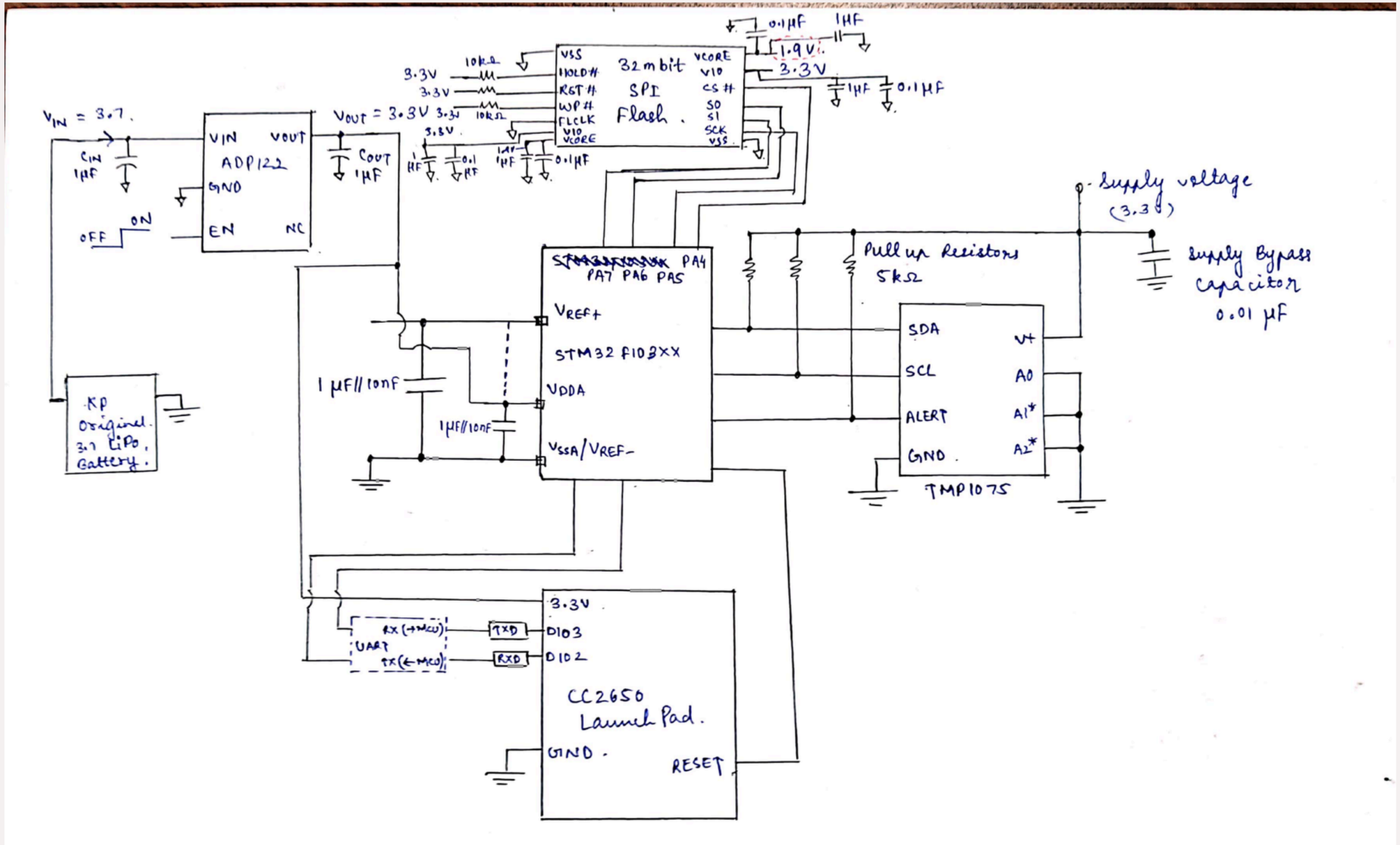

GANTT CHART

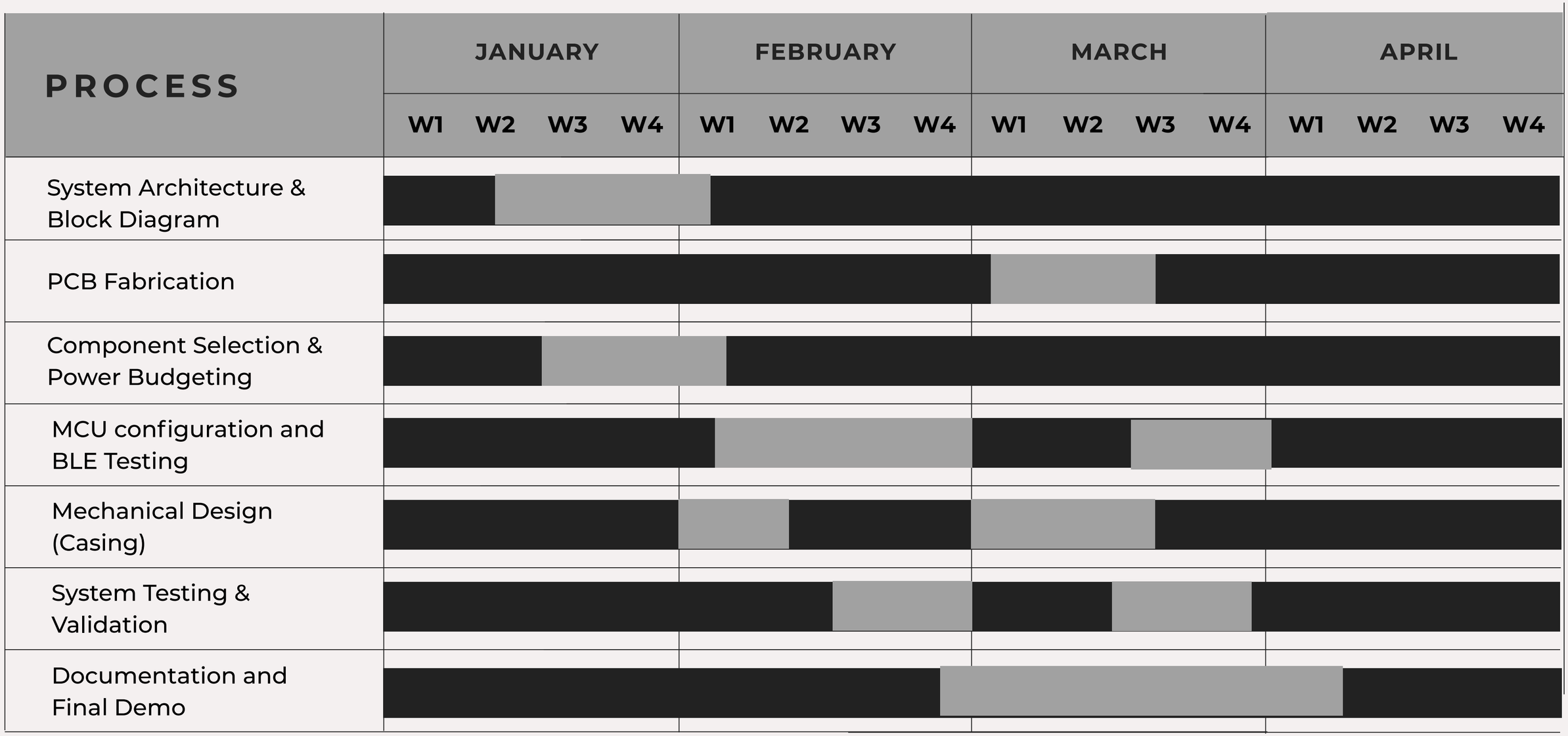
PROCESS
JANUARY
FEBRUARY
MARCH
APRIL
W1 W2 W3 W4 W1 W2 W3 W4 W1 W2 W3 W4 W1 W2 W3 W4
System Architecture & Block Diagram
PCB Fabrication
Component Selection & Power Budgeting
MCU configuration and BLE Testing
Mechanical Design (Casing)
System Testing & Validation
Documentation and Final Demo

Work Distribution

Sub-Systems	Work Division
PCB block	Monica & Khushi
MCU configuring/flash memory/beacon configuring	Arnav & Monica
BLE beacon Tx Rx	Rahul & Khyati
MCU Analysis	Khushi & Rahul
Casing / Hardware Design	Khyati & Arnav

Work Distribution & Week-wise Goals

WEEK-1
03-10 FEB

Configure STM32 clock, GPIOs, and power domains; verify stable operation on the prototype. Bring up CC2650 BoostXL and confirm BLE Tx/Rx by advertising test data.

WEEK-2
11-17 FEB

Integrate MCU with temperature sensor, flash memory, and BLE; finalize schematics and verify reliable full-circuit operation on the bench (Milestone 2).

WEEK-3
18-24 FEB

Design and finalize the hardware casing suitable for embedded concrete deployment. Perform preliminary power profiling and battery-life estimation based on duty cycles.

WEEK-4
25 FEB-
03 MAR

Complete PCB layout including antenna considerations, grounding, and power integrity. Run design checks (ERC/DRC) and prepare manufacturing files for PCB fabrication.

WEEK-5
04-11 MAR

Send PCB for fabrication and procure remaining components. Refine firmware logic for data acquisition, maturity computation, logging, and BLE advertising.

Work Distribution & Week-wise Goals

WEEK-6
12-19 MAR

Assemble the printed PCB and perform bring-up testing of power, MCU, and peripherals. Debug hardware–firmware integration issues and verify stable system operation.

WEEK-7
20-27 MAR

Perform end-to-end testing of sensing, processing, logging, and BLE communication; validate range, power, and accuracy against targets and complete final milestone.

WEEK-8
28-4 APRIL

Integrate hardware into casing and perform final field-style tests. Demonstrate a fully working proof-of-concept system with wireless concrete maturity monitoring.

WEEK-9
5-12 APRIL

Prepare complete technical documentation including system architecture, schematics, firmware flow, and test results. Preparation for final demo.

FINAL DEMO
15 APRIL

Key risks and mitigation strategies

Signal Attenuation Inside Concrete

Risk: Concrete absorbs RF signals, reducing BLE range.
Mitigation: Use short-range BLE beaconing (≥3 m) and place antenna close to surface-facing side of casing.

Limited Battery Life

Risk: Embedded device cannot be recharged or replaced easily.
Mitigation: Use ultra-low-power components, deep-sleep MCU modes, 15-minute sampling, and low-duty BLE advertising.

Environmental Harshness

Risk: Concrete environment may damage electronics.
Mitigation: IP67-rated enclosure and internal conformal protection.

Temperature Measurement Error

Risk: Poor thermal coupling between sensor and concrete.
Mitigation: Use thermally conductive casing/interface (metal tip or thermal paste) while electrically isolating electronics.

Data Loss Due to Power Failure

Risk: Sudden battery drop during flash write may corrupt data.
Mitigation: Use buffered writes, power-fail safe flash handling, and conservative write timing.

Expected Deliverables

1	Fully functional embedded concrete maturity sensor node
2	BLE-based strength-status display on a mobile or PC device
3	Validated power budget demonstrating long-term battery operation
4	Custom PCB design with compact, embedded-friendly layout
5	Protective enclosure design suitable for concrete embedding
6	Complete technical documentation, test procedures, and results

THANK YOU